Installation, Operation, and Maintenance

Wall-Mount Air Handlers
1.5 to 3 Ton

5TMM5B0A30M21SA
5TMM5B0B30M21SB
5TMM5B0B36M31SB
5TMM5B0C36M31SA

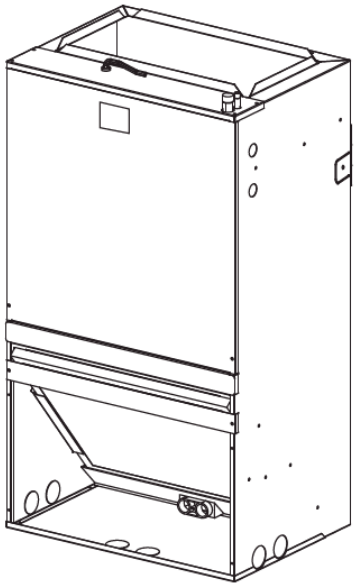

Note: *Graphics in this document are for representation only. Actual model may differ in appearance.*

⚠ SAFETY WARNING

Only qualified personnel should install and service the equipment. The installation, starting up, and servicing of heating, ventilating, and air-conditioning equipment can be hazardous and requires specific knowledge and training. Improperly installed, adjusted or altered equipment by an unqualified person could result in death or serious injury. When working on the equipment, observe all precautions in the literature and on the tags, stickers, and labels that are attached to the equipment.

March 2026

AHR-SVX009B-EN

Introduction

Read this manual thoroughly before operating or servicing this unit.

This document is customer property and is to remain with this unit. Return to the service information pack upon completion of work.

Warnings, Cautions, and Notices

Safety advisories appear throughout this manual as required. Your personal safety and the proper operation of this machine depend upon the strict observance of these precautions.

The three types of advisories are defined as follows:

⚠ WARNING	Indicates a potentially hazardous situation which, if not avoided, could result in death or serious injury.
⚠ CAUTION	Indicates a potentially hazardous situation which, if not avoided, could result in minor or moderate injury. It could also be used to alert against unsafe practices.
NOTICE	Indicates a situation that could result in equipment or property-damage only accidents.

Important Environmental Concerns

Scientific research has shown that certain man-made chemicals can affect the earth's naturally occurring stratospheric ozone layer when released to the atmosphere. In particular, several of the identified chemicals that may affect the ozone layer are refrigerants that contain Chlorine, Fluorine and Carbon (CFCs) and those containing Hydrogen, Chlorine, Fluorine and Carbon (HCFCs). Not all refrigerants containing these compounds have the same potential impact to the environment. Trane advocates the responsible handling of all refrigerants.

Important Responsible Refrigerant Practices

Trane believes that responsible refrigerant practices are important to the environment, our customers, and the air conditioning industry. All technicians who handle refrigerants must be certified according to local rules. For the USA, the Federal Clean Air Act (Section 608) sets forth the requirements for handling, reclaiming, recovering and recycling of certain refrigerants and the equipment that is used in these service procedures. In addition, some states or municipalities may have additional requirements that must also be adhered to for responsible management of refrigerants. Know the applicable laws and follow them.

⚠ WARNING

Proper Field Wiring and Grounding Required!

Failure to follow code could result in death or serious injury.

All field wiring MUST be performed by qualified personnel. Improperly installed and grounded field wiring poses FIRE and ELECTROCUTION hazards. To avoid these hazards, you MUST follow requirements for field wiring installation and grounding as described in NEC and your local/state/national electrical codes.

⚠ WARNING

Personal Protective Equipment (PPE) Required!

Failure to wear proper PPE for the job being undertaken could result in death or serious injury.

Technicians, in order to protect themselves from potential electrical, mechanical, and chemical hazards, MUST follow precautions in this manual and on the tags, stickers, and labels, as well as the instructions below:

- **Before installing/servicing this unit, technicians MUST put on all PPE required for the work being undertaken (Examples; cut resistant gloves/ sleeves, butyl gloves, safety glasses, hard hat/ bump cap, fall protection, electrical PPE and arc flash clothing). ALWAYS refer to appropriate Safety Data Sheets (SDS) and OSHA guidelines for proper PPE.**
- **When working with or around hazardous chemicals, ALWAYS refer to the appropriate SDS and OSHA/GHS (Global Harmonized System of Classification and Labelling of Chemicals) guidelines for information on allowable personal exposure levels, proper respiratory protection and handling instructions.**
- **If there is a risk of energized electrical contact, arc, or flash, technicians MUST put on all PPE in accordance with OSHA, NFPA 70E, or other country-specific requirements for arc flash protection, PRIOR to servicing the unit. NEVER PERFORM ANY SWITCHING, DISCONNECTING, OR VOLTAGE TESTING WITHOUT PROPER ELECTRICAL PPE AND ARC FLASH CLOTHING. ENSURE ELECTRICAL METERS AND EQUIPMENT ARE PROPERLY RATED FOR INTENDED VOLTAGE.**

⚠ WARNING

Follow EHS Policies!

Failure to follow instructions below could result in death or serious injury.

- **All Trane personnel must follow the company's Environmental, Health and Safety (EHS) policies when performing work such as hot work, electrical, fall protection, lockout/tagout, refrigerant handling, etc. Where local regulations are more stringent than these policies, those regulations supersede these policies.**
- **Non-Trane personnel should always follow local regulations.**

⚠ WARNING

Cancer and Reproductive Harm!

This product can expose you to chemicals, including lead, which are known to the State of California to cause cancer and birth defects or other reproductive harm. For more information go to www.P65Warnings.ca.gov.

⚠ WARNING

Safety Hazard!

Failure to follow instructions below could result in death or serious injury or property damage.

This unit is not to be used by persons (including children) with reduced physical, sensory, or mental capabilities, or lack of experience and knowledge, unless they have been given supervision or instruction concerning the use of the appliance by a person responsible for their safety.

Do not allow children to play or climb on the unit or to clean or maintain the unit without supervision.

⚠ WARNING

Safety Hazard!

Failure to follow instructions below could result in death or serious injury, and property damage.

Do NOT install the unit outdoors.

⚠ WARNING

Check for Safety Devices!

Failure to follow instructions below could cause unsafe conditions and result in death, serious injury, or property damage.

Do not bypass safety devices.

⚠ WARNING

Safety Precautions!

Failure to follow the safety precautions could result in serious injury, death, or property damage.

Appropriate fire extinguishing equipment must be available and easily accessible if any hot work is conducted on the refrigerating equipment or any associated parts. Keep dry powder or CO_2 fire extinguisher adjacent to the charging area.

⚠ WARNING

Safety Hazard!

Failure to follow instructions below could result in death or serious injury and equipment or property damage.

- **Do not use any items other than those approved by the manufacturer for defrosting or cleaning process.**
- **Store the appliance in a room without continuously operating ignition sources(for example: open flames, an operating gas appliance, or an operating electric heater).**
- **Do not pierce or burn.**
- **Be cautious that refrigerants may be odorless.**

⚠ WARNING

Carbon Monoxide Poisoning!

Failure to follow instructions below could result in death or serious injury, or property damage.

If the unit is installed in an enclosed area with any carbon monoxide producing devices (for example, automobile, space heater, or water heater), confirm the area is properly ventilated.

⚠ WARNING

Safety Hazard!

Failure to follow instructions below could result in death or serious injury or property damage.

Connect the air handler to an outdoor unit suitable for use with R-454B refrigerant only.

⚠ WARNING

Hazardous Voltage!

Failure to disconnect power before servicing could result in death or serious injury.

Disconnect all electric power, including remote disconnects before servicing. Follow proper lockout/tagout procedures to ensure the power can not be inadvertently energized. Verify that no power is present with a voltmeter.

⚠ WARNING

Risk of Fire — Flammable Refrigerant!

Failure to follow instructions below could result in death or serious injury, and equipment damage.

- **To be repaired only by trained service personnel.**
- **Do not puncture refrigerant tubing.**
- **Dispose of properly in accordance with federal or local regulations.**

⚠ WARNING

Live Electrical Components!

Failure to follow all electrical safety precautions when exposed to live electrical components could result in death or serious injury.

When it is necessary to work with live electrical components, have a qualified licensed electrician or other individual who has been properly trained in handling live electrical components perform these tasks.

⚠ WARNING

Refrigerant under High Pressure!

Failure to follow instructions below could result in an explosion which could result in death or serious injury or equipment damage.

System contains oil and refrigerant under high pressure. Recover refrigerant to relieve pressure before opening the system. See unit nameplate for refrigerant type. Do not use non-approved refrigerants, refrigerant substitutes, or refrigerant additives.

⚠ WARNING

Safety Hazard!

Failure to follow instructions below could result in death or serious injury or property damage.

This unit is not to be used by persons (including children) with reduced physical, sensory, or mental capabilities, or lack of experience and knowledge, unless they have been given supervision or instruction concerning the use of the appliance by a person responsible for their safety.

Do not allow children to play or climb on the unit or to clean or maintain the unit without supervision.

⚠ WARNING

Grounding Required!

Failure to follow instructions below could result in death or serious injury, or property damage.

- **Reconnect all grounding devices.**
- **All parts of this product that are capable of conducting electrical current are grounded.**
- **If grounding wires, screws, straps, clips, nuts, or washers used to complete a path to ground are removed for service, they must be returned to their original position and properly fastened.**

⚠ CAUTION

Sharp Edges!

Failure to follow instructions below could result in minor to moderate injury.

The service procedure described in this document involves working around sharp edges. To avoid being cut, technicians MUST put on all necessary Personal Protective Equipment (PPE), including gloves and arm guards.

⚠ CAUTION

Corrosion Hazard!

Failure to follow instructions below could result in personal injury or equipment damage.

To prevent shortening its service life, do not use air handler during the finishing phases of construction or remodeling. The low return air temperatures can lead to the formation of condensate. Condensate in the presence of chlorides and fluorides from paint and other components creates a corrosive condition which may cause rapid deterioration of the cabinet and internal components.

NOTICE

Equipment Damage!

Failure to follow instructions below could result in equipment damage.

Use only factory-authorized kits and accessories for installation or modification unless otherwise specified. Some localities may require a licensed installer.

Copyright

This document and the information in it are the property of Trane, and may not be used or reproduced in whole or in part without written permission. Trane reserves the right to revise this publication at any time, and to make changes to its content without obligation to notify any person of such revision or change.

Trademark

All trademarks referenced in this document are the trademarks of their respective owners.

Revision History

- Model numbers 5TMM5B0B30M21SA and 5TMM5B0B36M31SA have been updated to 5TMM5B0B30M21SB and 5TMM5B0B36M31SB.
- The Dimensional Data chapter has been updated.
- The Style 1 Wall Mount procedure has been removed from the Blower Removal Instructions chapter.

Table of Contents

General Information 7
- Features 7
  - Standard Features 7
  - Optional Accessories 7
- Installation Recommendations. 7

Product Background 8

Information on Servicing 9
- Prior to Beginning Work 9
- Repairs to Electrical Components 9
- Detection of Flammable Refrigerants 9
- Removal and Evacuation 10
- Charging Procedures 10
- Recovery 10
- Decommissioning. 11

Dimensional Data. 12

Refrigerant Leak Detection System 13
- Minimum Conditioned Space 13
- Verification of Mitigation 14

Unit Clearances 16
- Recess Mounting or Wall Mounting Option 16
- Condensate Drain Preparation 16
- Ductwork 17

Installation Instructions. 19
- Mounting Air Handler to Wall 19
- Connecting Ducting 20
- Metering Devices / Liquid Line Connection 20

TXV Replacement 21
- TXV Bulb Horizontal Mounting. 21
- TXV Bulb Vertical Mounting 21
- Field-Installed TXV Retrofit. 22

Connecting Refrigerant Lines 25

Leak Testing. 26
- Pressure Test 26
- Vacuum Test 26

Electrical Information and Wiring 27

Low Voltage Connections 28
- Single Stage Cooling with Electric Heat 28
- Two Stage Condensing Units. 28

Airflow Adjustments. 29

System Charging 31
- TXV 31

Blower Removal Instructions 32

Electrical Wiring Diagram 34

Field Wiring Diagram 35

Performance and Electrical Data 36

Minimum Airflow CFM 37

Heater Pressure Drop Table. 38

Checkout Procedures. 39

Appendix A. 40

General Information

Features

Standard Features

- All aluminum coil.
- Blower and coil slide out easily for maintenance.
- Factory-sealed cabinet certified to achieve 1.4% or less air leakage rate at 1.0-inch water column.
- Front or bottom return air.
- Air handler has factory installed drain pans and is shipped for upflow applications only.
- 208/240 Vac operation.
- Multi-speed direct drive blower constant torque ECM motor.
- Factory installed R-454B thermal expansion valve.
- Stud or wall mounting installation.
- Fully insulated cabinet.
- 3/4-inch NPT primary and secondary drains.
- AHRI certified and ETL listed.

Optional Accessories

5, 7.5, and 10 kW Single Phase Electric Heaters

- Circuit breakers are standard on all single phase 5, 7.5, and 10 kW heaters.

Panels

- Solid access panel
- Grille access panel

Installation Recommendations

The 5TMM5 series wall mount air handler is designed for installation in a closet, utility room, alcove and can be wall mounted. These versatile units are applicable to air conditioning and heat pump applications. Field installed electric resistance heaters are available.

Important: *Installation of this unit shall be made in accordance with the National Electric Code, NFPA No. 90A and 90B, and any other local codes or utilities requirements.*

Notes:

- *Air handlers have been evaluated in accordance with the Code of Federal Regulations, Chapter 24, Part 3280 or the equivalent. “suitable for mobile home use”.*
- *The manufacturer recommends installing ONLY A.H.R.I approved, matched indoor and outdoor systems. Some of the benefits of installing approved matched indoor and outdoor split systems are maximum efficiency, optimum performance, and the best overall system reliability.*
- *There is no declared maximum altitude for operating the appliance.*
- *Charging of the refrigerating system shall be according to the instructions provided by the manufacturer of the outdoor unit.*

Product Background

These air handlers are versatile upflow only models that can be recess mounted or flush mounted onto walls. These air handlers have the following standard features:

- **Application Versatility:** This unit is designed for use in front or bottom return air position. Offset hanging brackets attach to unit and wall to allow hanging inside closet. Product design for use with A2L refrigerant are equipped with an A2L refrigerant detection system (RDS), which includes A2L Sensor, Mitigation Control Board, and Wiring Harnesses. Refer to the wiring and operation instructions of this manual. Product design for use with A2L refrigerant are marked with R-454B refrigerant specified on the nameplate, and the product will be marked with the following symbols:

  Figure 1. Symbols

- **Motor**: Constant torque ECM speeds and torques are controlled by software embedded in the motor to maintain constant torque. Motors are pre-programmed at the factory.
- **Cabinet**: Sturdy, short, galvanized steel cabinet with painted front panels. Cabinet fully insulated with 1/2-inch faced insulation to prevent sweating and mold growth, to encapsulate glass fibers, and to provide excellent R-value. Stick pins ensure insulation remains in place. Units ship with disposable filter in filter rack.
- **Modular Electric Heat Kits**: Heat kits available with either circuit breakers or terminal blocks. Available in 5, 8, and 10 kW. Models with electric heat include sequencers and temperature limit switches for safe, efficient operation. Modules are easily installed in the field using Molex plugs or can be ordered factory installed. Controls are accessible from the front for easy service. Electrical connections can be made from the top or left. Disconnect does not protrude through the wall panel. Fan time delay relay standard for increased efficiency.
- **Blower**: Direct drive multi-speed blowers circulate air quietly and efficiently. Motor speeds can be easily selected via motor terminals. Swing mounted blowers can be easily removed for service.
- **Electronic Circuit Board**: Electronic circuit board provides 30 sec. ON/OFF blower time delay extracting more heat/cool from the coil
- **DX Coil**: High efficiency rifled aluminum tubes and enhanced aluminum fins provide maximum heat transfer. All coils factory leak tested with two stage pressure decay and mass spectrometer process then nitrogen pressurized, and factory sealed for maximum reliability. Coil mounted Schrader allows pre-installation pressure testing. Available with either check style flowrater or TXV metering device.
  Galvanized metal drain pan with bottom primary and secondary drain connections or alternate right side primary. All connections 3/4-inch FPT. Access door allows for coil cleaning.

Information on Servicing

All replacement parts shall be in accordance with the manufacturer's specifications.

Prior to Beginning Work

Prior to beginning work on systems containing flammable refrigerants, safety checks are necessary to ensure that the risk of ignition is minimized. For repair to the refrigerating system, the following shall be completed prior to conducting work on the system:

- Work shall be undertaken under a controlled procedure to minimize the risk of a flammable gas or vapor being present while the work is being performed.
- All maintenance staff and others working in the local area shall be instructed on the nature of work being carried out. Work in confined spaces shall be avoided.
- The area shall be checked with an appropriate refrigerant detector prior to and during work, to ensure the technician is aware of potentially toxic or flammable atmospheres. Ensure that the leak detection equipment being used is suitable for use with all applicable refrigerants, i.e., non-sparking, adequately sealed or intrinsically safe.
- If any hot work is to be conducted on the refrigerating equipment or any associated parts, appropriate fire extinguishing equipment shall be available to hand. Have a dry powder or CO_2 fire extinguisher adjacent to the charging area.
- No person carrying out work in relation to a refrigerating system which involves exposing any pipe work shall use any sources of ignition in such a manner that it may lead to the risk of fire or explosion. All possible ignition sources, including cigarette smoking, should be kept sufficiently far away from the site of installation, repairing, removing and disposal, during which refrigerant can possibly be released to the surrounding space. Prior to work taking place, the area around the equipment is to be surveyed to make sure that there are no flammable hazards or ignition risks. "No Smoking" signs shall be displayed.
- Ensure that the area is in the open or that it is adequately ventilated before breaking into the system or conducting any hot work. A degree of ventilation shall continue during the period that the work is carried out. The ventilation should safely disperse any released refrigerant and preferably expel it externally into the atmosphere.
- The following checks shall be applied to installations using flammable refrigerants:
  - marking to the equipment continues to be visible and legible. Markings and signs that are illegible shall be corrected;
  - refrigerating pipe or components are installed in a position where they are unlikely to be exposed to any substance which may corrode refrigerant containing components, unless the components are constructed of materials which are inherently resistant to being corroded or are suitably protected against being so corroded.

Repairs to Electrical Components

Where electrical components are being changed, they shall be fit for the purpose and to the correct specification. At all times the manufacturer's maintenance and service guidelines shall be followed. If in doubt, consult the manufacturer's technical department for assistance.

Repair and maintenance to electrical components shall include initial safety checks and component inspection procedures. If a fault exists that could compromise safety, then no electrical supply shall be connected to the circuit until it is satisfactorily dealt with. If the fault cannot be corrected immediately but it is necessary to continue operation, an adequate temporary solution shall be used. This shall be reported to the owner of the equipment, so all parties are advised.

Initial safety checks shall include:

- that capacitors are discharged; this shall be done in a safe manner to avoid possibility of sparking;
- that no live electrical components and wiring are exposed while charging, recovering or purging the system;
- that there is continuity of earth bonding.

Check that cabling will not be subject to wear, corrosion, excessive pressure, vibration, sharp edges or any other adverse environmental effects. The check shall also take into account the effects of aging or continual vibration from sources such as compressors or fans.

Detection of Flammable Refrigerants

Under no circumstances shall potential sources of ignition be used in the searching for or detection of refrigerant leaks. A halide torch (or any other detector using a naked flame) shall not be used.

The following leak detection method is deemed acceptable for all refrigerant systems:

- Electronic leak detectors may be used to detect refrigerant leaks but, in the case of flammable refrigerants, the sensitivity may not be adequate, or may need re-calibration. (Detection equipment shall be calibrated in a refrigerant-free area.) Ensure that the detector is not a potential source of ignition and is suitable for the refrigerant used. Leak detection equipment shall be set at a percentage of the LFL of

the refrigerant and shall be calibrated to the refrigerant employed, and the appropriate percentage of gas (25 % maximum) is confirmed.

Example of leak detection fluids is **bubble method**.

If a leak is suspected, all naked flames shall be removed/ extinguished.

If a leakage of refrigerant is found which requires brazing, all of the refrigerant shall be recovered from the system, or isolated (by means of shut off valves) in a part of the system remote from the leak.

Removal and Evacuation

When breaking into the refrigerant circuit to make repairs - or for any other purpose - conventional procedures shall be used. However, for flammable refrigerants it is important that best practice be followed, since flammability is a consideration. The following procedure shall be adhered to:

- Safely remove refrigerant following local and national regulations
- Evacuate
- Purge the circuit with inert gas (optional for A2L)
- Evacuate (optional for A2L)
- Continuously flush or purge with inert gas when using flame to open circuit
- Open the circuit

The refrigerant charge shall be recovered into the correct recovery cylinders if venting is not allowed by local and national codes. For appliances containing flammable refrigerants, the system shall be purged with oxygen-free nitrogen to render the appliance safe for flammable refrigerants.

This process might need to be repeated several times. Compressed air or oxygen shall not be used for purging refrigerant systems.

For appliances containing flammable refrigerants, refrigerants purging shall be achieved by breaking the vacuum in the system with oxygen-free nitrogen and continuing to fill until the working pressure is achieved, then venting to atmosphere, and finally pulling down to a vacuum (optional for A2L). This process shall be repeated until no refrigerant is within the system (optional for A2L). When the final oxygen-free nitrogen charge is used, the system shall be vented down to atmospheric pressure to enable work to take place.

The outlet for the vacuum pump shall not be close to any potential ignition sources, and ventilation shall be available.

Charging Procedures

In addition to conventional charging procedures, the following requirements shall be followed.

- Ensure that contamination of different refrigerants does not occur when using charging equipment. Hoses or lines shall be as short as possible to minimise the amount of refrigerant contained in them.
- Cylinders shall be kept in an appropriate position according to the instructions.
- Ensure that the refrigerating system is earthed prior to charging the system with refrigerant.
- Label the system when charging is complete (if not already).
- Extreme care shall be taken not to overfill the refrigerating system.

Prior to recharging the system, it shall be pressure-tested with the appropriate purging gas. The system shall be leak-tested on completion of charging but prior to commissioning. A follow up leak test shall be carried out prior to leaving the site.

See “Installation Instructions,” p. 19 for further details.

Recovery

When removing refrigerant from a system, either for servicing or decommissioning, it is recommended good practice that all refrigerants are removed safely.

When transferring refrigerant into cylinders, ensure that only appropriate refrigerant recovery cylinders are employed. Ensure that the correct number of cylinders for holding the total system charge is available. All cylinders to be used are designated for the recovered refrigerant and labelled for that refrigerant (i.e., special cylinders for the recovery of refrigerant). Cylinders shall be complete with pressure-relief valve and associated shut-off valves in good working order. Empty recovery cylinders are evacuated and, if possible, cooled before recovery occurs.

The recovery equipment shall be in good working order with a set of instructions concerning the equipment that is at hand and shall be suitable for the recovery of the flammable refrigerant. If in doubt, the manufacturer should be consulted. In addition, a set of calibrated weighing scales shall be available and in good working order. Hoses shall be complete with leak-free disconnect couplings and in good condition.

The recovered refrigerant shall be processed according to local legislation in the correct recovery cylinder, and the relevant waste transfer note arranged. Do not mix refrigerants in recovery units and especially not in cylinders.

If compressors or compressor oils are to be removed, ensure that they have been evacuated to an acceptable level to make certain that flammable refrigerant does not remain within the lubricant. The compressor body shall not be heated by an open flame or other ignition sources to accelerate this process. When oil is drained from a system, it shall be carried out safely.

Decommissioning

Before carrying out this procedure, it is essential that the technician is completely familiar with the equipment and all its detail. It is recommended good practice that all refrigerants are recovered safely. Prior to the task being carried out, an oil and refrigerant sample shall be taken in case analysis is required prior to re-use of recovered refrigerant. It is essential that electrical power is available before the task is commenced.

1. Become familiar with the equipment and its operation.
2. Isolate system electrically.
3. Before attempting the procedure, ensure that:
   a. Mechanical handling equipment is available, if required, for handling refrigerant cylinders.
   b. All personal protective equipment is available and being used correctly.
   c. The recovery process is supervised at all times by a competent person.
   d. Recovery equipment and cylinders conform to the appropriate standards.
4. Pump down refrigerant system, if possible.
5. If a vacuum is not possible, make a manifold so that refrigerant can be removed from various parts of the system.
6. Make sure that cylinder is situated on the scales before recovery takes place.
7. Start the recovery machine and operate in accordance with instructions.
8. Do not overfill cylinders (no more than 80 % volume liquid charge).
9. Do not exceed the maximum working pressure of the cylinder, even temporarily.
10. When the cylinders have been filled correctly and the process completed, make sure that the cylinders and the equipment are removed from site promptly and all isolation valves on the equipment are closed off.
11. Recovered refrigerant shall not be charged into another refrigerating system unless it has been cleaned and checked.

Equipment shall be labelled stating that it has been de-commissioned and emptied of refrigerant. The label shall be dated and signed. For appliances containing flammable refrigerant, ensure that there are labels on the equipment stating the equipment contains flammable refrigerant.

Dimensional Data

Figure 2. Dimensional data

5TMM5B0B30M21SB
5TMM5B0B36M31SB

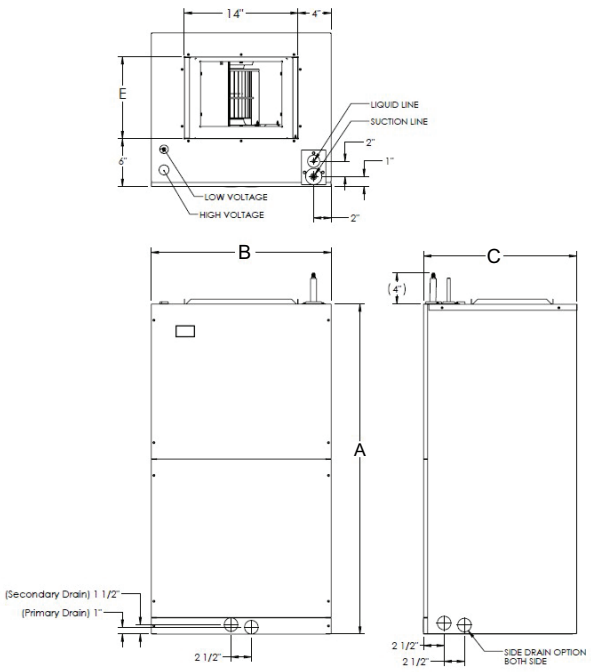

5TMM5B0A30M21SA
5TMM5B0C36M31SA

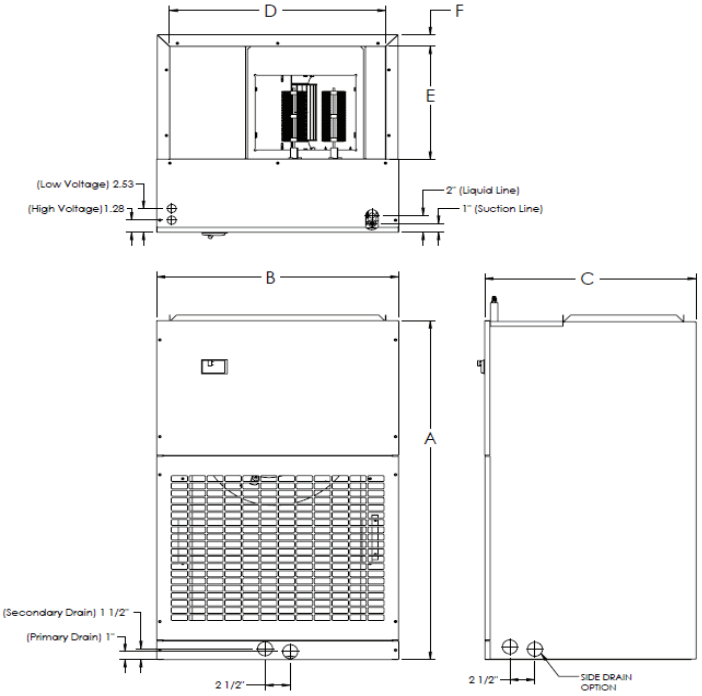

Table 1. Product dimensions for 5TMM5 (inch)

Air Handler Model	Cabinet Height (A)	Cabinet Width (B)	Cabinet Depth (C)	(D)	(E)	(F)	Front Return Opening	Bottom Return Opening	Supply /Top Outlet
5TMM5B0A30M21SA	36.00	20.50	15.00	18.00	19.25	1.25	13.88 x 19.50	19.25 x 8.50	12.00 x 9.25
5TMM5B0B30M21SB	40.50	22.00	18.75	—	10.00	—	18.75 x 20.75	20.00 x 7.50	10.00 x 8.25
5TMM5B0B36M31SB	40.50	22.00	18.75	—	12.00	—	18.75 x 20.75	20.00 x 7.50	11.50 x 10.00
5TMM5B0C36M31SA	36.00	24.00	21.00	21.50	12.00	1.25	19.75 x 23.00	23.00 x 8.50	12.00 x 12.00

Note: All dimensions are in inches.

Refrigerant Leak Detection System

For all tables contained in this section of the manual, the refrigerant charge is the total system charge which is marked on the system according to the instructions provided by the manufacturer of the outdoor unit.

⚠ WARNING

Risk of Fire — Flammable Refrigerant!

Failure to follow instructions below could result in death or serious injury, and equipment damage.

- **To be repaired only by trained service personnel.**
- **Do not puncture refrigerant tubing.**
- **Dispose of properly in accordance with federal or local regulations.**

⚠ WARNING

Leak Detection System Installed!

Failure to follow instructions below could result in death or serious injury or equipment damage.
The unit is equipped with electrically powered safety measures and must be powered at all times after installation, except during servicing, to detect any leak.

To ensure safety of the building occupants, the air handler is equipped with a refrigerant leak detection system. The system is comprised of a refrigerant sensor and a mitigation control board. The system automatically detects leaks in the indoor coil and initiates actions to mitigate the risk of ignition of the leaked refrigerant, including:

- Turning on the blower of the indoor unit to dilute leaked refrigerant;
- Fully opening any zoning dampers, when applicable;
- Turning off the compressor of the outdoor unit;
- De-energizing potential sources of ignition connected to the system;
- Energizing an audible alarm, if so equipped.

Examples of potential ignition sources that are de-energized include electrostatic air cleaners.

Refrigerant sensors for refrigerant leak detection systems shall only be replaced as specified by the manufacturer.

Minimum Conditioned Space

The installer must verify that the total space conditioned by the system is large enough to safely dilute any leaked refrigerant in the event of a refrigerant leak of the indoor coil.

The minimum space conditioned by the appliance shall be according to Table 2, p. 13. The conditioned space includes any parts of the space connected via an air duct system. The altitude of installation is the altitude above sea level of the site where the equipment is installed.

Table 2. Minimum mitigation airflow for R-454B systems

	Altitude (ft)								
	Sea level – 2,000	2,001 - 4,000	4,001 - 6,000	6,001 - 8,000	8,001 - 10,000	10,001 - 12,000	12,001 - 14,000	14,001 - 15,000	above 15,000
Charge (lb)	Minimum Conditioned Space (ft^2)								
4	63	66	70	74	79	85	91	94	98
5	79	83	88	93	99	106	113	118	122
6	95	100	105	112	119	127	136	141	147
7	110	116	123	130	138	148	159	165	171
8	126	133	140	149	158	169	181	188	196
9	142	149	158	167	178	190	204	212	220
10	158	166	175	186	198	211	227	235	245
11	173	183	193	205	218	232	249	259	269
12	189	199	211	223	237	254	272	282	294
13	205	216	228	242	257	275	295	306	318
14	221	232	246	260	277	296	318	330	343
15	236	249	263	279	297	317	340	353	367
16	252	266	281	298	317	338	363	377	392
17	268	282	298	316	336	359	386	400	416

Table 2. Minimum mitigation airflow for R-454B systems (continued)

	Altitude (ft)								
	Sea level – 2,000	2,001 - 4,000	4,001 - 6,000	6,001 - 8,000	8,001 - 10,000	10,001 - 12,000	12,001 - 14,000	14,001 - 15,000	above 15,000
Charge (lb)	Minimum Conditioned Space (ft^2)								
18	284	299	316	335	356	380	408	424	440
19	299	315	333	353	376	402	431	447	465
20	315	332	351	372	396	423	454	471	489

Notes:

- *The installer should verify the actuation of the mitigation procedure, as well as the airflow according to the chart. The installer should refer to the airflow table provided by the furnace or blower manufacturer.*
- *The total system charge which is marked on the system as specified in the outdoor unit manufacturer's instructions.*

Verification of Mitigation

The Mitigation Control Board provides refrigerant leak detection and mitigation response for systems utilizing A2L-type refrigerants. The Mitigation Control Board can monitor up to two A2L Sensors, depending on the system's needs. The control module will constantly monitor the A2L Sensor(s) for a refrigerant leak condition. **When the A2L Sensor detects a concentration of refrigerant which meets or exceeds the Lower Flammability Limit (% LFL), the control module locks out the compressor and activates the ventilating fan.**

The Mitigation Control Board control module is certified as a Class B safety control and conforms to the guidelines set forth in Annex LL of UL standard 60335-2-40:

1. The control will communicate with an external A2L Sensor in order to request data on the concentration of airborne refrigerant within the system enclosure.
2. The control will provide a system response (i.e. deactivate the compressor, energize a ventilating fan, and provide an alarm indication) in the event of a reported concentration of at least 15% of the Lower Flammability Limit (determined by refrigerant composition). The system response (also referred to as the "mitigation state" or "safe state") must last.
3. The control will only be able to recover operation if the system response has been active for at least 5 minutes and the A2L Sensor reports a concentration of refrigerant less than 8% LFL.
4. Loss of communication between the control and the A2L Sensor will also result in the mitigation state for at least 5 minutes. The control will not recover until communication is restored.

RDS: A2L Mitigation + Accessory Control:

VERIFICATION: RUNNING THE SYSTEM TEST IS MANDATORY FOR ALL INSTALLATIONS. THE HVAC SYSTEM MUST NOT COMPLETE COMMISIONING UNTIL THE INSTALLATION STEPS OUTLINED IN THIS MANUAL HAVE BEEN SUCCESSFULLY COMPLETED.

Important: *Never connect sensor to the mitigation control board while it is powered up. Only use the "sensor1" port ,the "sensor2" port shall only be used in applications with two indoor units in which the sensor from the second indoor unit will also connect to the mitigation control board. always ensure that the system is powered off before connecting the sensor to the mitigation control board. If the sensor is not connected before powering up, the system will enter leak mitigation mode. Once the system enters leak mitigation mode it will stay in mitigation state for at least 5 minutes. Therefore, it is strongly advised to connect the sensor before powering up.*

Perform the A2L Mitigation Control refrigerant leakage test for all modes of operation one by one. – Cooling (for ACs and heat pumps), Heating (for heat pumps), Electric Heating, and Fan modes.

The "Accessory Control Kit" includes a relay and a wire harness used to de-energize the W1 & W2 call or to energize or de-energize add on equipment / accessories or functions.

Figure 3. A2L mitigation control

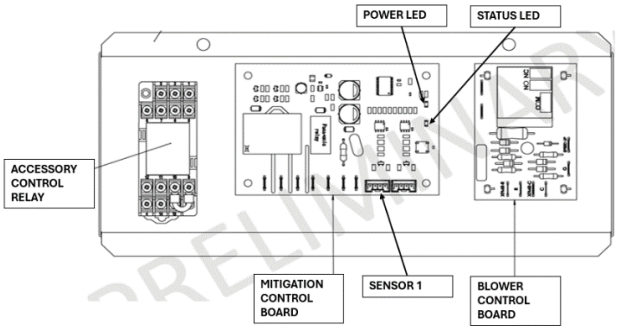

Set the thermostat to one of the above operation modes, and ensure that the system is powered and running properly in that mode. The test sequence will need to be performed again in each operation mode. Open the enclosure by removing the two screws and the metal cover to access the mitigation control board and accessory control relay. Once the system is powered, the control will communicate with the A2L sensor to request data on the concentration of airborne refrigerant within the coil cabinet, wait 10 seconds, and verify that the STATUS LED shows Warm-Up mode (solid ON), then wait 20 – 30 seconds and verify that the STATUS LED shows Run mode (solid OFF).

1. Locate the sensor cable connected to the “SENSOR1” port on the mitigation control board. Remove the sensor cable by squeezing the tab on the connector and pulling away from the board to disconnect the sensor.
2. Once the sensor is disconnected, wait 15 seconds, the mitigation control board no longer detects the sensor, verify that the STATUS LED blinks fault code for communication fault (2 blinks), the mitigation sequence begins:
   a. The HVAC system operation that was chosen the control will provide a system response which will deactivate the compressor and the additional equipment / accessory that is connected to the terminals 3, 4 and 11, 12 of the relay such as but not limited to electric heat or gas heat or air cleaner at the same time, then it will energize the indoor blower. See the relay and wiring diagram below for details.
   b. The indoor blower will begin to operate and remain running for at least 5 minutes from initial fault detection. The STATUS LED (2 blink) fault code will continue for the entire 5 minutes.
   c. Once the above steps a and b have been confirmed the test is considered successful. It is recommended to wait the entire 5 minutes to allow the test sequence to expire.

Note: *Loss of communication between the control and the sensor will also result in the mitigation state for at least 5 minutes. The control will not recover until communication is restored.*

Unit Clearances

This unit is designed for zero clearance installation on three sides and adequate clearance to provide access for service in the front. A minimum of 2.5 to 3.5 feet clearance is recommended on the front end. See figure Minimum Clearance for Air Handler below.

Figure 4. Minimum clearance for air handler

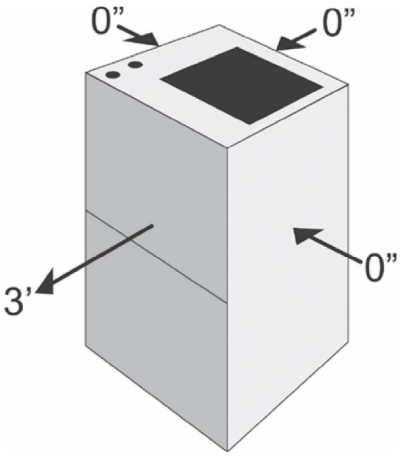

Recess Mounting or Wall Mounting Option

These units are designed to be installed in a small room where they can be mounted above a water heater or recessed into a wall. The unit should be installed in Vertical Upflow position ONLY.
If installing the air handler into a recessed wall, the unit must leave clearance to allow the removal of the front panels. See figure Mounting Option below. The bottom of the unit should also rest on a sturdy platform or floor. The unit must be level to allow condensate drainage. These air handlers come with an offset mounting bracket that attaches the air handler to the wall when the unit is flush mounted to the wall.

Figure 5. Mounting option

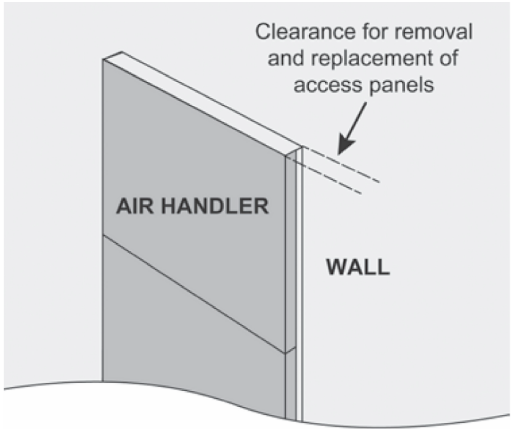

Condensate Drain Preparation

- Condensate drain is located at front as shown in picture with primary and secondary drain port.
- Pipe condensate system using proper PVC fittings.
- Ensure a minimum 2-inch trap is installed in the condensate drain. Locate the trap near to the connection opening on the air handler. See illustration below.

Figure 6. Drain preparation

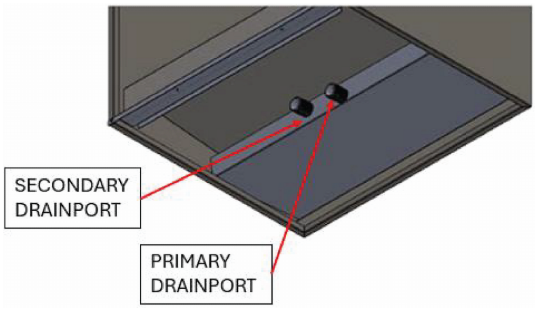

An auxiliary drain pan must be provided by the installer and placed under the entire unit with a separate drain line that is properly sloped and terminated in an area visible to the homeowner. The auxiliary pans provide extra protection to the area under the unit should the primary and secondary drain plug up and overflow. The drains from the auxiliary drain pan must be installed according to the local building codes.

NOTICE

Equipment Damage!

Failure to follow instructions below could result in equipment damage.
Do NOT connect drain lines from the auxiliary drain pan to the primary drain line of the coil.

The drain lines must be installed with 1/4-inch per foot pitch to provide free drainage. A condensate trap MUST be installed on the primary drain line to ensure proper drainage of the condensate. The trap must be installed in the drain line below the bottom of the drain pan. See figure Condensate Drain Trap below.

Note: *This unit comes with a bottom tray factory installed to meet 1.4% air leakage when in the front return configuration. If other return configurations are required, remove the bottom tray panel.*

Figure 7. Condensate drain trap

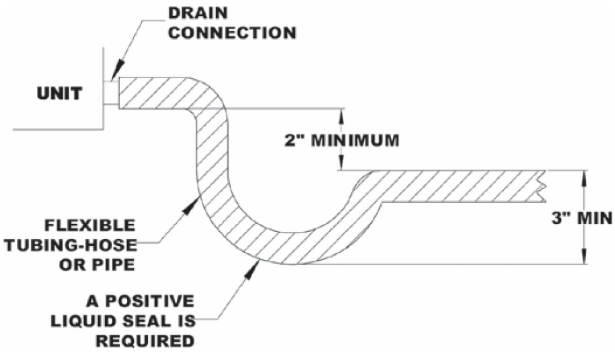

Since coil is upstream of the blower, all drains must be trapped or sealed. Failure to do so will result in condensate overflow from the drain pan.

NOTICE

Equipment Damage!

Failure to follow instructions below could result in condensate overflow from the drain pan.
All drains must be trapped or sealed since the coil is located upstream of the blower.

NOTICE

Equipment Damage!

Failure to follow instructions below could result in equipment damage.
Use Teflon tape to connect drain lines to nylon or plastic drain pans. Do NOT use solvent-based pipe dope, as it will reduce the pan's lifespan.

The drain pan has primary (white) and secondary (red) drain connections. If a secondary drain line is required, it should be run separately from the primary and should terminate in a highly visible location.

Condensate disposal through the secondary drain line indicates that the primary drain line is plugged and needs cleaning. If a secondary drain line will not be provided, plug the secondary drain. Drain plugs are not to be reused without plumbers' tape or putty. Drain line connection should be finger tightened, then turned no more than one complete turn as needed to ensure a firm connection. Do not overtighten connection or damage may occur.

Ductwork

Duct systems should be installed in accordance with standards for air-conditioning systems, National Fire Protection Association Pamphlet No. 90A or 90B. They should be sized in accordance with National Environmental System Contractors Association Manual K, or whichever is applicable.

On any job, non-flammable flexible collars should be used for the return air and discharge connections to prevent transmission of vibration (see Figure 8, p. 17). Although these units have been specially designed for quiet vibration-free operation, air ducts can act as soundboards, can, if poorly installed, amplify the slightest vibration to the annoyance level.

Figure 8. Prevent transmission of vibration

All main supply and return air drops should be properly sized as determined by the designer of the duct system and should not necessarily be the size of the duct flange openings of the unit. (The duct size should never be smaller than the flange openings of the air handler supply and return air openings.)

These models have a bottom or front return. Discard the drain access panel in the bottom of the unit if this is a bottom return application (see Figure 9, p. 17). For front return applications, the front access panel should be removed and discarded.

Figure 9. Bottom return application

If an accessory grill is being used, the front access panel should be removed and discarded (see Figure 10, p. 18).

Figure 10. Front access panel

Filter sizes varies for each model (see spec sheet) that needs to be installed in the filter rack that is provided (see Figure 11, p. 18). Inspect and clean or replace filter every month. A blocked filter reduce airflow to the coil and hinder the performance of the system.

Figure 11. Filter rack

It is recommended that wherever supply and return air sheet metal ducts pass through unconditioned areas, they be insulated to pre- vent excessive heat loss during heating operation. When applied in conjunction with summer air conditioning, sheet metal duct routed through unconditioned areas should be insulated and have an outside vapor barrier to prevent formation of condensation.

Installation Instructions

NOTICE

Equipment Damage!

Failure to follow instructions below could result in equipment damage.
The unit must be adequately sized. The tonnage of the outdoor unit should never exceed the tonnage of this unit.

NOTICE

Equipment Damage!

Failure to follow instructions below could result in equipment or property damage.
The coil has a dry nitrogen precharge. Release the pressure through the Schrader valve test port before installation. If there is no holding pressure, return the coil to distributor for exchange.

NOTICE

Coil Damage!

Failure to follow instructions below could result in coil damage.
Protect the Schrader valve and core from heat during brazing and installation to prevent leaks. Temporarily remove the core with a removal tool and replace it after brazing.

NOTICE

Equipment Damage!

Failure to follow instructions below could result in equipment damage.
Insulate the suction line into the cabinet and to a maximum extent to prevent condensate dripping on the access door..

- Clean coil fins with degreasing agent or mild detergent and rinse fins clean prior to installation.
- The refrigerant line sizes should be selected according to the recommendations of the outdoor unit manufacturer.
- Care must be taken to ensure all connection joints are burr-free and clean. Failure to do so may increase chances of a leak. It is recommended to use a pipe cutter to remove the spun closed end of the suction line.
- To reduce air leakage, rubber grommets may be present where the lines pass through the coil case. To avoid damage, remove grommets prior to brazing by sliding over the lines. Use a quenching cloth or allow the lines to cool before reinstalling the grommets.
- Use of wet rags/quenching cloth is highly recommended to prevent weld-related damages to the casing and Schrader valve (if present).

Mounting Air Handler to Wall

1. Install the air handler in a level position side to side and front to back. If this step is not followed, condensate water damage may occur. (Both flush mount and recess mount configurations.)
2. Determine where the air handler is to be placed on the wall. Place the hanging bracket on the wall and align the holes of the bracket with the wall studs. Level the hanging bracket and mark the holes to drill pilot holes for the screws.

Figure 12. Bracket location

3. Drill the pilot holes.

Figure 13. Pilot holes

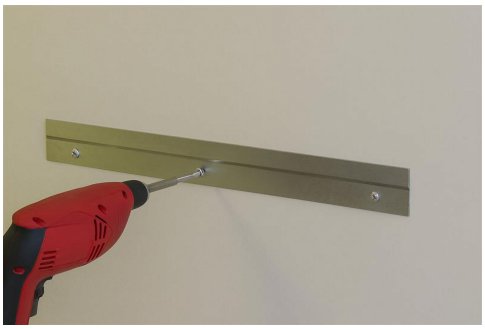

4. Secure the bracket with screws sufficient to hold 4X the weight of the air handler.

Figure 14. Securing brackets

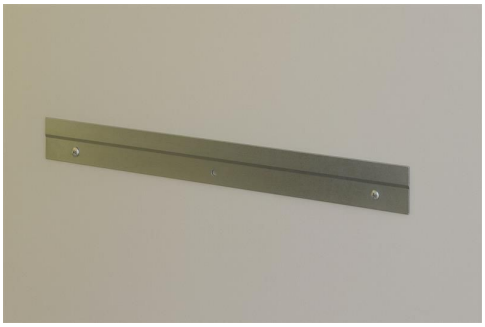

5. Position the air handler on the wall with the bracket on the air handler slightly higher than the bracket secured on the wall. Lower the air handler so that the brackets engage. Check the unit for level, both side to side and front to back.

Figure 15. Leveling

Connecting Ducting

Secure supply air ducting to the top of the air handler. Canvas connectors are recommended for reducing potential noise transmission.

If the bottom return air opening is being used, remove the bottom panel. If a front return is being used, this panel will remain in place.

Figure 16. Connecting ducting

Metering Devices / Liquid Line Connection

The coil uses a TXV metering device.

TXV Replacement

NOTICE

Equipment Damage!

Failure to follow instructions below could result in equipment or property damage.
Protect the sensing bulb and TXV body from overheating during brazing by covering them with a quench or wet cloth. Pointing the brazing flame away provides only partial protection.

Figure 17. TXV replacement

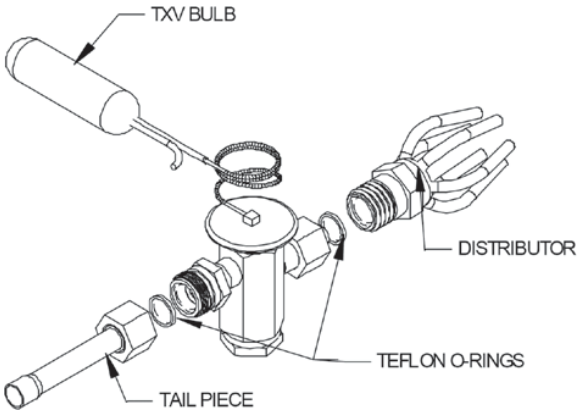

NOTICE

Equipment Damage!

Failure to follow instructions below could result in equipment or property damage.
Confirm the TXV is compatible with R-454B refrigerant used in the outdoor system.

NOTICE

Compressor Damage!

Failure to follow instructions below could result in compressor damage.
Size the valves according to the capacity of the outdoor unit.

TXV Bulb Horizontal Mounting

The orientation and location of the TXV bulb has a major influence on the system performance.

NOTICE

Equipment Damage!

Failure to follow instructions below could result in improper functioning of the TXV valve.
Confirm the TXV bulb is in direct contact with the suction/vapor line without any gap between the bulb and tube.

It is recommended that the TXV bulb be installed parallel to the ground (on a horizontal plane). The bulb position should be at 2 o'clock or 10 o'clock. Figure 18, p. 21 shows the recommended position for the TXV bulb installation in the horizontal plane.

Figure 18. Recommended location for horizontal TXV bulb mount

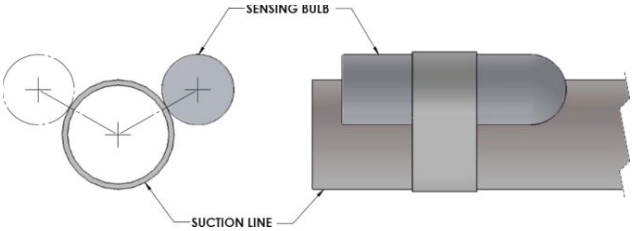

Bulb position at 2 o'clock or 10 o'clock

The TXV sensing bulb should be mounted on the suction line approximately 6-inch from the TXV or coil housing using the metal clamp provided. In order to obtain a good temperature reading and correct superheat control, the TXV sensing bulb must conform to all of the following criteria:

1. The sensing bulb MUST be in direct and continuous contact with the suction line.
2. The sensing bulb should be mounted horizontally on the suction line.
3. The sensing bulb MUST be mounted at the 2 o'clock or 10 o'clock position on the circumference of the suction line.
4. The sensing bulb MUST be insulated from outside air.

A properly mounted sensing bulb will prevent false readings caused by liquid refrigerant that may have formed inside the suction/vapor line. Insulation will protect the sensing bulb from false readings due to contact with warm air.

TXV Bulb Vertical Mounting

As recommended in Section "TXV Bulb Horizontal Mounting," p. 21, the TXV sensing bulb should be mounted in a horizontal plane in relation to the suction/vapor line. However, some installation configurations may require that the sensing bulb be mounted vertically. In this instance, place the bulb opposite the piping wall being hit by refrigerant and oil leaving the distributor tubes, and with capillary tubes directed upwards as shown in Figure 19, p. 22.

Figure 19. Recommended location for vertical TXV bulb mount

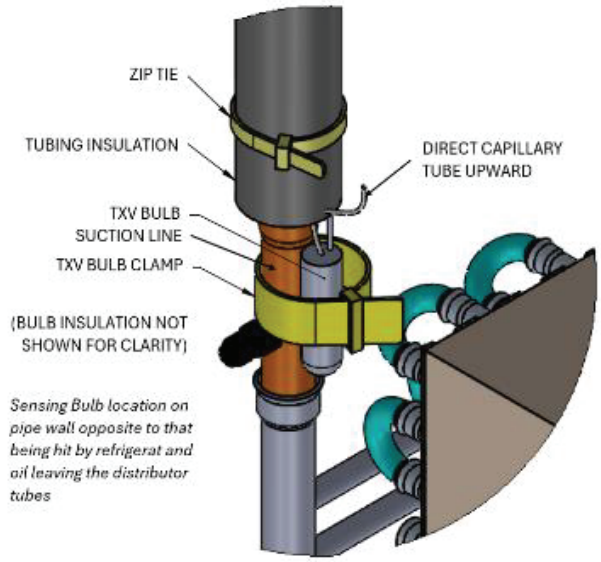

NOTICE

Equipment Damage!

Failure to follow instructions below could result in equipment or property damage.
If the TXV sensing bulb is mounted vertically, the capillary MUST be directed upwards. The bulb must be mounted on the wall opposite the refrigerant and oil leaving the distributor tubes.

Field-Installed TXV Retrofit

Note: *Photos are for basic illustration purposes only. Actual equipment configuration may differ from that shown.*

⚠ WARNING

Burn Hazard!

Failure to follow the below instruction could result in severe burns to the skin.
Do not touch brazed joints while hot.

When installing an expansion valve, it is not necessary to slide the coil out of the housing.

1. Disassemble the flowrater body using two wrenches. Unscrew the body with a counterclockwise motion.

Figure 20. Disassembling the flowrater body

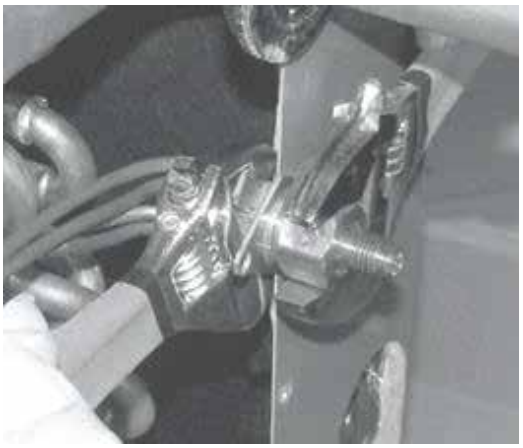

2. Remove the existing flowrater piston using a small wire or pick.

Figure 21. Removing the piston

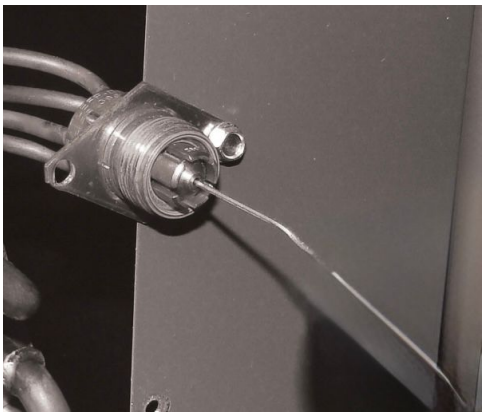

3. Replace the Teflon O-ring seal in place (located between the halves).

Figure 22. Replacing the seal

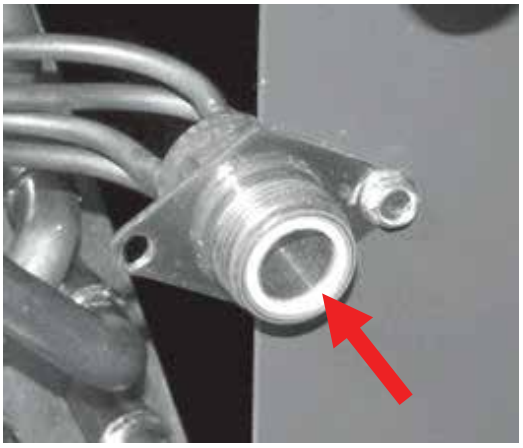

4. Inspect the TXV box to confirm that the valve is compatible with the refrigerant in the system.

5. Remove the valve from the box and note the location of the inlet side (threaded port) and the outlet side (swivel nut port).

Figure 23. Inlet and outlet port location

6. After ensuring that the Teflon O-ring seal is still in place inside the flowrater body, screw the swivel nut onto the flowrater body.

Figure 24. Swivel nut installation

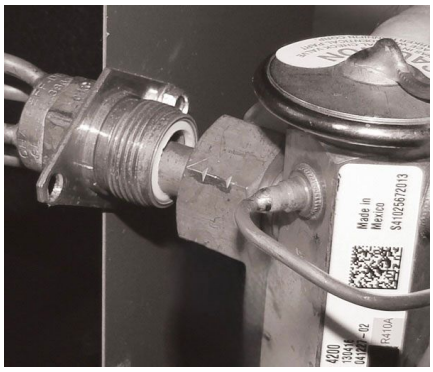

7. Slide attachment the nut onto the liquid line stub out.
8. Braze the stub-out portion to the liquid line and let cool.
9. Remove the additional Teflon O-ring seal from the box and place on the shoulder just inside the TXV inlet port. Screw the nut attached to the stub-out portion of the flowrater body onto the inlet port of the TXV.

Figure 25. Seal placement

10. Tighten all connections taking care to use proper back up. Tighten the nut to a torque of approximately 10- 30 ft-lbs.
11. Remove the valve identification sticker from the valve and place it adjacent to the Aspen model number on unit name plate.
12. Some Aspen coils come with a Schrader valve on the suction line. If a Schrader port is present:
    a. Remove the valve stem from the Schrader port mounted on the suction line.

    Figure 26. Valve stem removal

    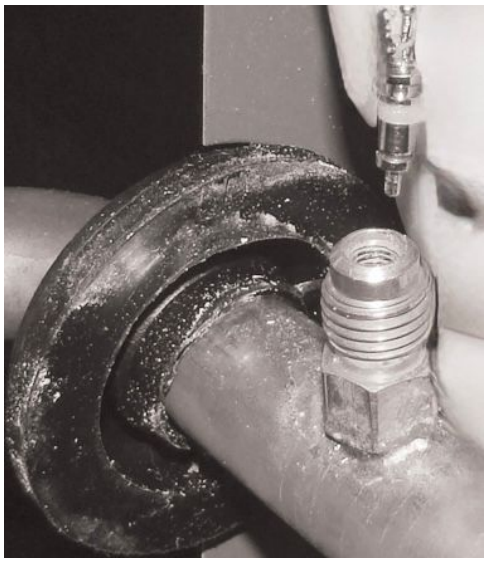

    b. Screw flare nut on TXV equalization tube on to the Schrader valve stem.

Figure 27. Nut installation

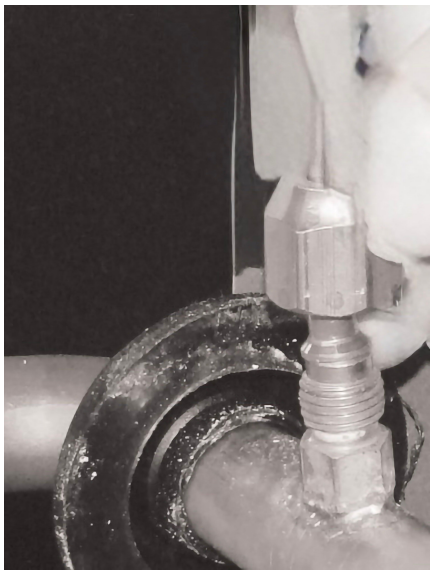

NOTICE

Tube Damage!

Failure to follow instructions below could result in equipment damage.

Avoid sharply bending the tubing when handling or manipulating the equalizer tube.

NOTICE

Equipment Damage!

Failure to follow instructions below could result in equipment damage.

A non-bleed expansion valve may need the use of a hard-start kit; follow the outdoor unit manufacturer's guidelines.

Connecting Refrigerant Lines

1. Release nitrogen holding charge by depressing the Schrader valve at the liquid line connection on the air handler. If no gas releases from the air handler, contact distributor regarding potential leak.

Figure 28. Nitrogen holding charge

2. Cut off Schrader valve fitting at the liquid line connection using a tubing cutter. Clean the burr from the cut tubing to reduce the chance of future leaks. Connect the liquid line to the tubing at the indoor unit.

Figure 29. Schrader valve

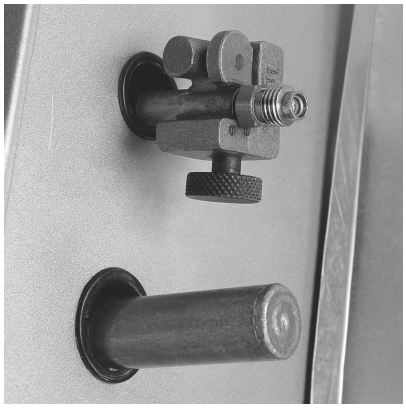

3. Use a tubing cutter to remove the spun end from the suction line connection at the air handler. Clean the burr from the cut tubing to reduce the chance of future leaks.
4. To avoid heat damage to grommets where present, remove these prior to brazing by sliding them over the refrigerant lines and out of the way.
5. Check to determine if the evaporator coil has a Schrader fitting on the suction manifold. If yes, remove the valve core to prevent heat damage during brazing. Replace the valve core once the piping has cooled.
6. If the air handler has a TXV metering device, remove the sensing bulb from the suction line prior to brazing to prevent heat damage from occurring. Replace the sensing bulb once the piping has cooled.

Figure 30. Sensing bulb

7. Flow nitrogen through the piping when brazing.
8. Braze both refrigerant line connections using proper brazing procedures.
9. When all line connections are brazed, perform a proper system evacuation procedure per the outdoor unit manufacturer instructions.
10. Seal the penetration openings where the lineset piping enters the air handler cabinet.

Figure 31. Seal the openings

Leak Testing

Pressure Test

- Using dry nitrogen, pressurize the field piping and indoor coil to the lower of the maximum operating pressures listed on the nameplates of the indoor and outdoor units (likely 600 psi).
- The test pressure after removal of the pressure source shall be maintained for at least one (1) hour with no decrease of pressure indicated by the test gauge, with the test gauge resolution not exceeding 30 psi.
- Check for leaks by using a soapy solution at each field-made joint.

Vacuum Test

Important: *Do not open the service valves until the refrigerant lines and indoor coil leak check and evacuation are complete.*

- Evacuate until the micron gauge reads no higher than 350 microns, then close off the valve to the vacuum pump.
- Observe the micron gauge. Evacuation is complete if the micron gauge does not rise above 500 microns in one (1) minute and 1500 microns in ten (10) minutes.
- Once evacuation is complete, blank off the vacuum pump and micron gauge, and close the valve on the manifold gauge set.

All procedures for charging the system with refrigerant shall be according to the instructions provided by the manufacturer of the outdoor unit.

Important: *Under no circumstances shall potential sources of ignition be used in the searching for or detection of refrigerant leaks.*

After charging the system, all indoor field-made joints of the field piping shall be checked for refrigerant leaks using an electronic leak detector calibrated for R-454B having a sensitivity of 5 grams per year or better.

Electrical Information and Wiring

⚠ WARNING

Hazardous Voltage!

Failure to disconnect power before servicing could result in death or serious injury.

Disconnect all electric power, including remote disconnects before servicing. Follow proper lockout/tagout procedures to ensure the power can not be inadvertently energized. Verify that no power is present with a voltmeter.

These units are designed for single or three phase 208/240 volts, 60 Hz power supply. Wire selection and wiring must be in accordance with the National Electric Code and/or local codes. Unit terminals are designed to accommodate copper and aluminum wiring. If aluminum wiring is used: please observe special precautions relative to sizing, wire connections and corrosion protection.

All models with 5, 8 or 10 kW electric heaters are arranged for single circuit connections. Models larger than 10 kW are arranged for multi-circuit protection. See the top part of wiring diagram at the end of this guide for detailed information.

Line voltage wiring should be routed through the access holes at the top of the air handler. Proper electrical conduit connection fittings should be used. Connect the power wiring to the line side connections on the air handler. The electrical ground wire should be connected to the grounding lug. Ensure both the field supplied ground wire and air handler GREEN ground wire are both secured to the grounding lug of the air handler.

Figure 32. Electrical information and wiring

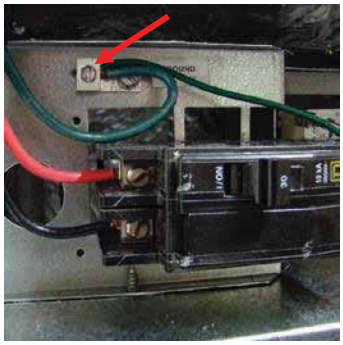

If the line voltage being supplied to the air handler is 208-volt single phase, the line voltage tap on the low voltage transformer needs to be moved from the 240-volt tap to the 208-volt tap. If this is not done, the secondary output voltage of the transformer will be too low.

Figure 33. Electrical information and wiring

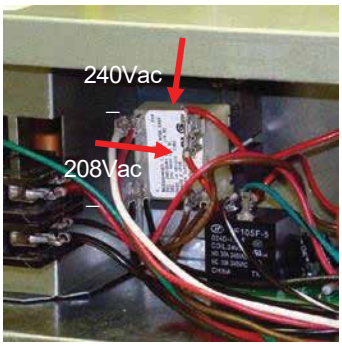

Low Voltage Connections

Single Stage Cooling with Electric Heat

The air handler comes factory setup for a single stage cooling system. If factory installed accessory electric heaters are pre-installed, the unit will also have a low voltage wire for the electric heat (see Figure 34, p. 28).

Figure 34. Low voltage wiring

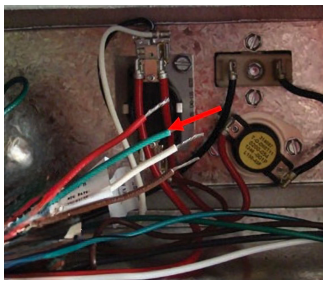

During cooling mode operation, the indoor blower G wire will energize a time delay relay inside the air handler. After a short time delay period, the time delay relay will send out a 24-volt signal to the low voltage terminal on the motor. Fan delay periods are 7 seconds ON delay and 65 seconds OFF delay. (See Schematic) The Y wire from the thermostat is not connected at the air handler. This wire goes directly to the outdoor unit 24 volt wiring to turn on the outdoor condensing unit when a call for cooling takes place. The 24-volt common for the outdoor unit circuits is connected at the air handler brown wire.

The electric heater low voltage wiring W terminal is wired directly from the thermostat to the air handler. The blower will delay on a heat call ON for a period of 5 seconds. The OFF-delay period is 60 seconds.

Figure 35. Thermostat to air handler connection

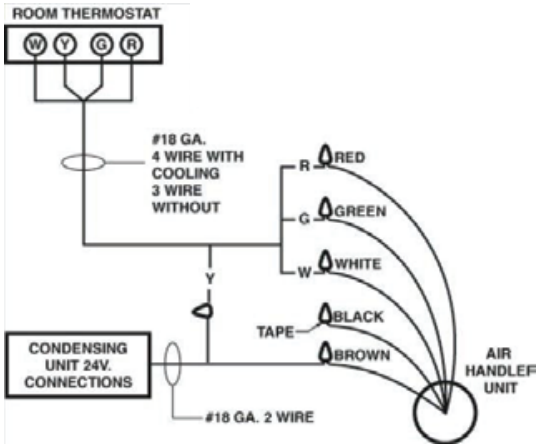

Two Stage Condensing Units

If the outdoor condensing unit is a two-stage model, a field provided Y2 wire can be connected to the motor using an electrical spade connector. The number 4 and 5 terminals on the motor are speed taps that will increase the blower speed for second stage cooling operation. Both the G and Y2 terminals will be energized at the same time during a call for second stage blower speed operation. The motor will run at the speed where the Y2 wire is connected (see Figure 36, p. 28).

Figure 36. Blower motor

Airflow Adjustments

Air volume needs to be set to the level recommended by the outdoor unit equipment manufacturer. Most systems will require around 400 CFM of indoor air for every 1 ton of system cooling capacity. The air volume must be set prior to attempting system charge.

This air handler uses a constant torque ECM Motor. This motor will try to maintain proper motor torque to achieve programmed air volume levels at varying levels of external static pressure. The air volume level produced by the air handlers at varying external static pressure levels is shown in the Table 3, p. 30.

Use a Magnehelic Gauge with a 1-inch scale and two static pressure tips to measure the static pressure during the air volume adjustment procedure. The high port static pressure tip should be placed in the supply duct near the outlet of the air handler. The low port static pressure tip should be placed in the return air duct near the entrance to the air handler. The factory provided air filter should be in place inside of the air handler.

Figure 37. Static pressure

1. Select a starting speed tap from the CFM table. The blower motor has selectable speed taps labeled 1 through 5 (see Figure 38, p. 29). The speed taps are energized by 24 volts received from the time delay relay. When two stage cooling units are used, both the first and second stage fan speed taps will be energized at the same time. The motor will run at the speed generated at the highest motor speed tap.

Figure 38. Blower motor

2. Call for fan only operation at the thermostat.
3. Read the external static pressure level on the Magnehelic gauge.
4. Make speed tap selection changes to get the air volume as close as possible to the required level.
5. If the static pressure is above 0.5-inch w.c., excessive turbulence or duct friction needs to be reduced. (Obstructions in the duct system can also cause excessive static pressure.)
6. When proper air volume is established, move on to the charging procedure.

Operating CFM based upon each speed tap number is shown on the electrical wiring diagram of the unit. Final air volume adjustments should be made by referencing total external static pressure (see Table 3, p. 30).

Table 3. External static pressure levels

Model	Speed Tap	CFM vs. External Static				
		0.10	0.20	0.30	0.04	0.50
5TMM5B0B30M21SB	T1	670	645	615	590	570
	T2	800	780	750	730	695
	T3	875	850	820	790	760
	T4	980	955	930	900	875
	T5	1065	1035	1015	995	970
5TMM5B0A30M21SA	T1	655	630	605	580	560
	T2	785	765	735	715	685
	T3	860	835	805	775	745
	T4	960	835	805	775	745
	T5	1045	1015	995	975	950
5TMM5B0B36M31SB	T1	1365	1332	1303	1271	1240
	T2	745	698	668	630	600
	T3	898	873	853	827	880
	T4	1174	1132	1106	1078	1047
	T5	1365	1332	1303	1271	1240
5TMM5B0C36M31SA	T1	745	715	675	640	615
	T2	940	910	875	840	805
	T3	1100	1070	1025	995	965
	T4	1220	1180	1155	1115	1085
	T5	1385	1350	1330	1290	1270

System Charging

NOTICE

Sensor Damage!

Failure to follow instructions below could result in equipment or property damage.
The unit is designed to be used with R–454B refrigerant and MUST be charged with R–454B refrigerant. Confirm the R–454B sensor is installed correctly and is operational.

NOTICE

Equipment Damage!

Failure to follow instructions below could result in equipment damage.
Properly charge the system to avoid performance loss and compressor damage.

NOTICE

Equipment Damage!

Failure to follow instructions below could result in equipment damage.
Follow the outdoor unit manufacturer's charging guidelines. The recommendations in this manual are general and do not override manufacturer specifications.

Where addition of charge is required to complete installation, instructions on how to determine the additional REFRIGERANT CHARGE and how to complete the REFRIGERANT CHARGE on the label provided by the outdoor unit manufacturer adjacent to the nameplate if the compressor bearing unit. Interconnecting refrigerant piping length and diameter shall be taken into consideration.

TXV

If the unit is equipped with a fixed TXV, add refrigerant until the subcooling measures at the outdoor unit liquid line matches the subcooling recommendations of the outdoor manufacturer. If the charge is unavailable charge the unit to a subcooling value of 8°F +/- 1°F.

If the unit is equipped with an adjustable TXV, add refrigerant until the subcooling measures at the outdoor unit liquid line matches the subcooling recommendations of the outdoor manufacturer. If the charge is unavailable charge the unit to a subcooling value of 8°F +/- 1°F.

Note: *When adjusting the TXV, the valve stem or adjusting screw should not be adjusted more than a ¼ turn at a time. To adjust superheat, turn the valve stem clockwise to increase and counterclockwise to decrease.*

- If subcooling and superheat are low, adjust TXV to 8°F +/- 1°F superheat, then check subcooling.
- If subcooling is low and superheat is high, add charge to raise subcooling to 8°F +/- 1°F, then check superheat.
- If subcooling and superheat are high, adjust TXV valve to 8°F +/- 1°F superheat, then check subcooling.
- If subcooling is high and superheat is low, adjust TXV valve to 8°F +/- 1°F superheat and remove charge to lower the subcooling to 8°F +/- 1°F.

The TXV should not be adjusted at light load / ambient conditions of 60°F or below.

Blower Removal Instructions

1. Turn off circuit breaker, unscrew and open upper access panels for front return application and open both upper and lower access panels for bottom return applications.

Figure 39. Upper and lower access panels

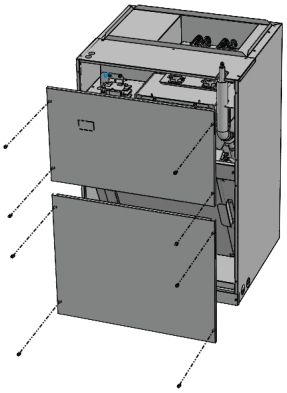

2. Unplug wire harnesses connections from the electrical box and motor.

Figure 40. Wire harness

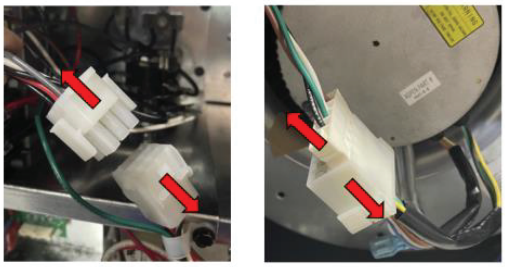

3. Unscrew and pull the electrical box out of the unit and set it aside.

Figure 41. Electrical box

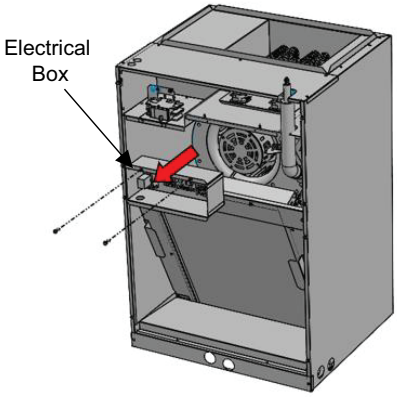

4. Remove two (2) screws on the baffle and set it aside to access the other 2 screws on both side of the coil assembly (see illustration below).

Figure 42. Remove baffle

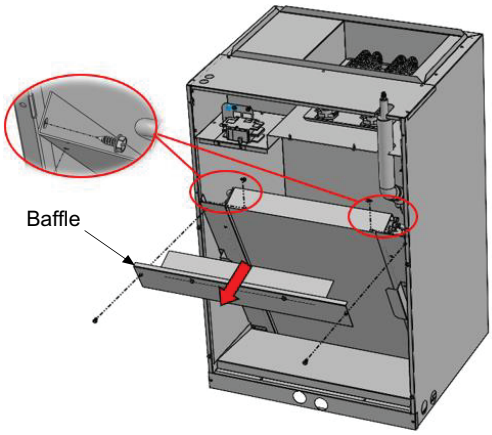

5. Tilt the coil out to access the blower assembly.

Figure 43. Access blower assembly

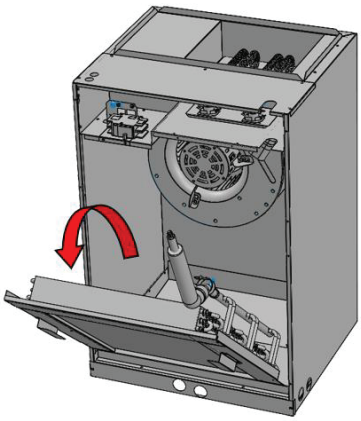

Note: *The 5TMM5B0B cabinet models have a patch-plate at the refrigerant lines that must be removed before removing the coil assembly.*

6. Unscrew the blower assembly and slide it out of the unit to replace motor or blower.

Figure 44. Replace motor or blower

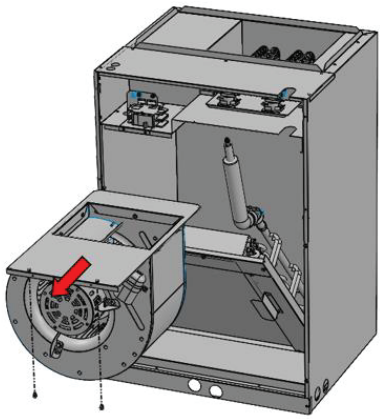

7. After servicing the blower assembly, replace it by reversing the process.

Electrical Wiring Diagram

Figure 45. Electrical wiring diagram

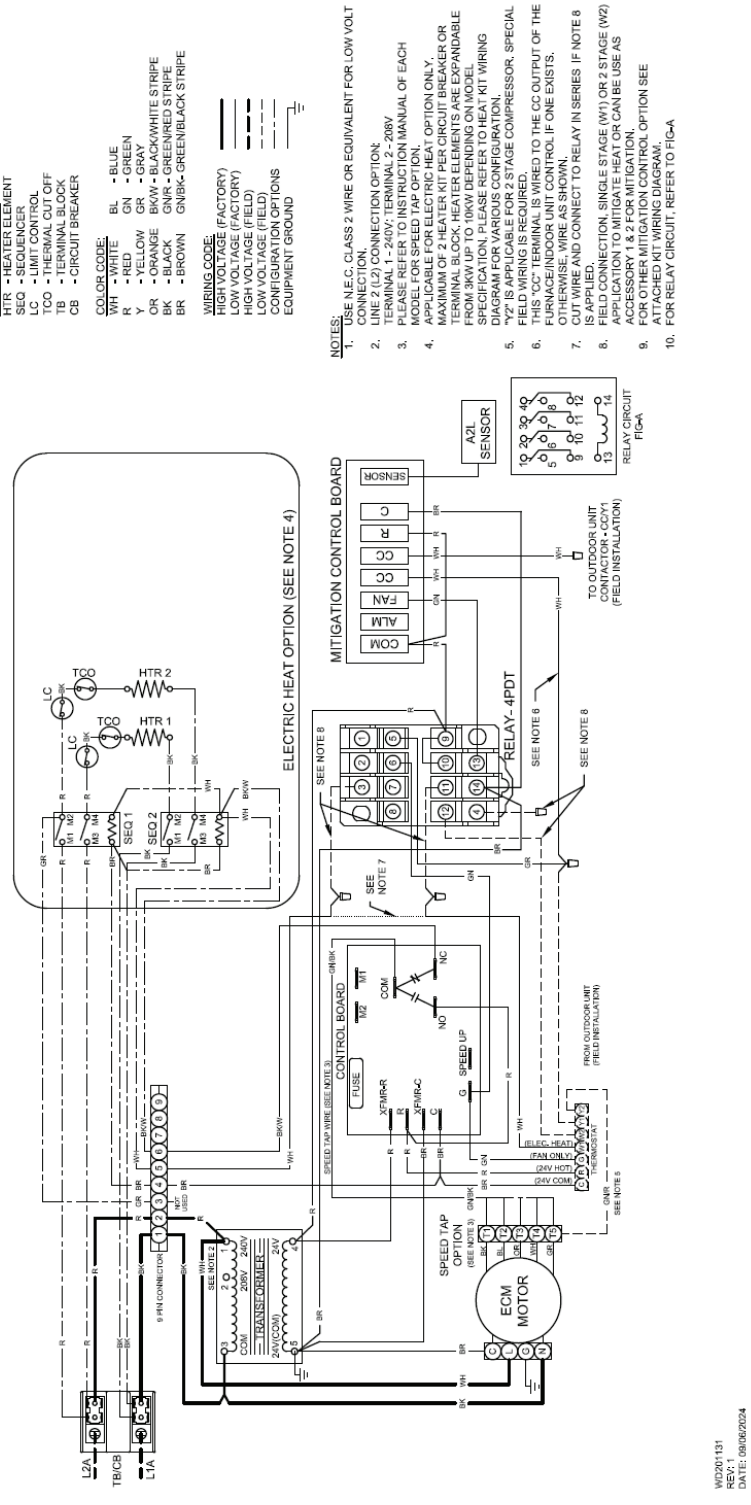

Field Wiring Diagram

Figure 46. Field wiring diagram

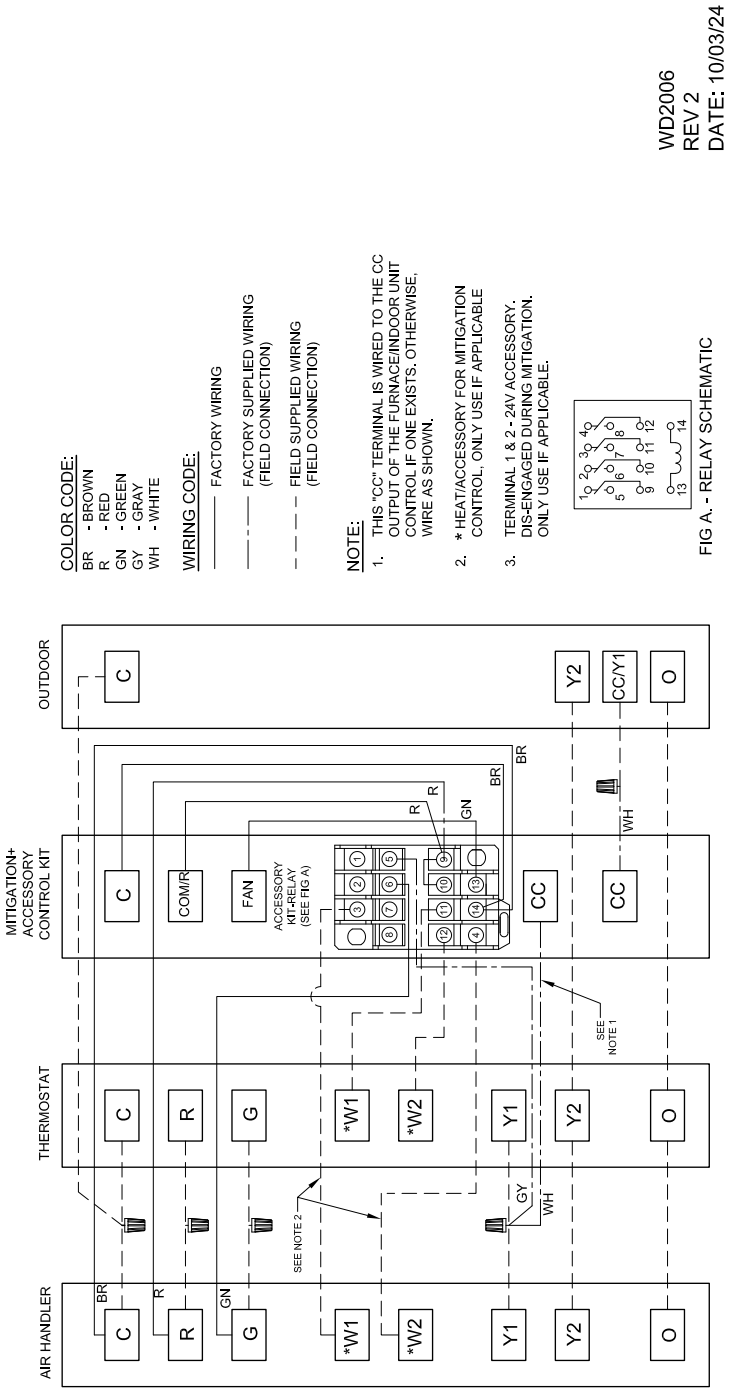

Performance and Electrical Data

Table 4. Models — 5TMM5B0A30M21SA and 5TMM5B0B30M21SB

Heater Model No.	Number of Circuits	240 Volt			208 Volt			Rated Voltage	Control Stages	Number of Heater Racks	Contains Circuit Breakers
		Capacity		Heater Amps per Circuit	Capacity		Heater Amps per Circuit				
		KW	BTUH		KW	BTUH					
BAYHTRA505BRKA	1	4.8	16400	20.00	3.6	12600	17.30	208/240/1/60	1	1	Yes
BAYHTRA508BRKA	1	8	27300	33.30	6	20500	28.80	208/240/1/60	1	2	Yes
BAYHTRA510BRKA	1	9.6	32800	40.00	7.2	24500	34.60	208/240/1/60	1	2	Yes

Table 5. Models — 5TMM5B0C36M31SA and 5TMM5B0B36M31SB

Heater Model No.	Number of Circuits	240 Volt			208 Volt			Rated Voltage	Control Stages	Number of Heater Racks	Contains Circuit Breakers
		Capacity		Heater Amps per Circuit	Capacity		Heater Amps per Circuit				
		KW	BTUH		KW	BTUH					
BAYHTRA505BRKA	1	4.8	16400	20.00	3.6	12600	17.30	208/240/1/60	1	1	Yes
BAYHTRA508BRKA	1	8	27300	33.30	6	20500	28.80	208/240/1/60	1	2	Yes
BAYHTRA510BRKA	1	9.6	32800	40.00	7.2	24500	34.60	208/240/1/60	1	2	Yes

Minimum Airflow CFM

Table 6. Minimum airflow CFM

Model	Heater	Speed Tap	Minimum CFM Required for EHK
5TMM5B0A30M21SA 5TMM5B0B30M21SB	BAYHTRA505BRKA	T2	660
	BAYHTRA508BRKA	T4	831
	BAYHTRA510BRKA	T4	831
5TMM5B0B36M31SB	BAYHTRA505BRKA	T4	570
	BAYHTRA508BRKA	T5	836
	BAYHTRA510BRKA	T5	836
5TMM5B0C36M31SA	BAYHTRA505BRKA	T4	1031
	BAYHTRA508BRKA	T5	1207
	BAYHTRA510BRKA	T5	1207

Heater Pressure Drop Table

Table 7. Heater pressure drop table

Airflow CFM	Number of Elements		Heater Elements	
	1	2	Heater Model	No. of Heater Elements
	Pressure Drop — (in. W.C.)		BAYHTRA505BRKA	1
600	0.01	0.03	BAYHTRA508BRKA	2
700	0.01	0.03	BAYHTRA510BRKA	2
800	0.01	0.03	—	—
900	0.01	0.03	—	—
1000	0.01	0.03	—	—
1100	0.01	0.03	—	—
1200	0.01	0.04	—	—
1300	0.02	0.04	—	—
1400	0.02	0.04	—	—

Checkout Procedures

The final phase of the installation is the system checkout procedures. The following list represents the most common items covered in a checkout procedure. Confirm all requirements in this document are met.

- ☐ All wiring connections are tight and properly secured.
- ☐ Voltage and running current are within limits.
- ☐ All refrigerant lines (internal and external to equipment) are isolated, secure, and not in direct contact with each other or structure.
- ☐ All braze connections have been checked for leaks. A vacuum of 350 microns provides confirmation that the refrigeration system is leak free and dry.
- ☐ Final unit inspection to confirm factory tubing has not shifted during shipment. Adjust tubing if necessary so tubes do not rub against each other or any component when unit runs.
- ☐ Ductwork is sealed and insulated.
- ☐ All drain lines are clear with joints properly sealed. Pour water into drain pan to confirm proper drainage. Provide enough water to ensure drain trap is primed.
- ☐ Supply registers and return grilles are open, unobstructed, and air filter is installed.
- ☐ Indoor blower and outdoor fan are operating smoothly and without obstruction.
- ☐ Indoor blower motor set on correct speed setting to deliver required CFM. Blower and fan set screws are tight.
- ☐ Cover panels are in place and properly tightened.
- ☐ System functions safely and properly in all modes.
- ☐ Refrigerant leak detection system mitigating actions are verified.
- ☐ All refrigerant safety procedures have been verified.
- ☐ Owner has been instructed on use of system and given manual.

Appendix A

Figure 47. Return air configuration

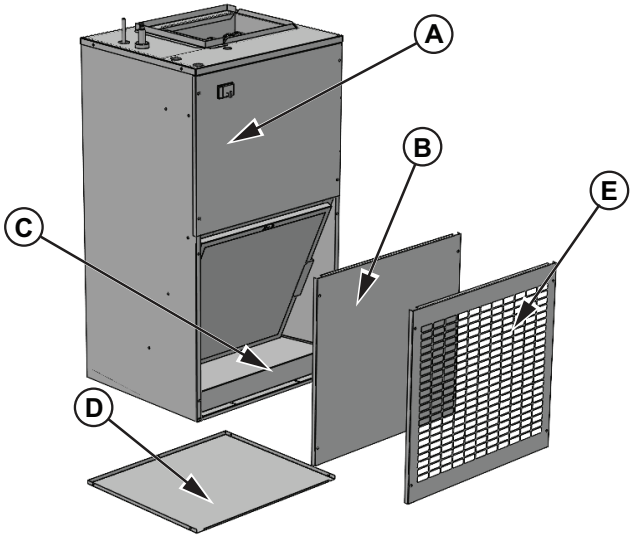

Table 8. Return air configuration

Item and Description	Part No.	5TMM5B0A30M21S			5TMM5B0B30M21S			5TMM5B0B36M31S			5TMM5B0C36M31S		
		Front/ BTM Return	Front Return	Bottom Return	Front/ BTM Return	Front Return	Bottom Return	Front/ BTM Return	Front Return	Bottom Return	Front/ BTM Return	Front Return	Bottom Return
A Upper access panel [a]	—	√	√	√	—	—	—	—	—	—	—	—	—
		—	—	—	√	√	√	√	√	√	—	—	—
		—	—	—	—	—	—	—	—	—	√	√	√
B Lower access panel (solid)	PN-L41149	—	—	√	—	—	—	—	—	—	—	—	—
	PN-L41148	—	—	—	—	—	√	—	—	√	—	—	—
	PN-L41147	—	—	—	—	—	—	—	—	—	—	—	√
C Drill shield	—	—	√	—	—	√	—	—	—	—	—	—	—
		—	—	—	—	—	—	—	√	—	—	—	—
		—	—	—	—	—	—	—	—	—	—	√	—
D Bottom tray	—	—	√	—	—	√	—	—	—	—	—	—	—
		—	—	—	—	—	—	—	√	—	—	—	—
		—	—	—	—	—	—	—	—	—	—	√	—
E Lower access panel (Grill)[b]	PN-L41150	√	√	—	—	—	—	—	—	—	—	—	—
	PN-L41152	—	—	—	√	√	—	√	√	—	—	—	—
	PN-L41151	—	—	—	—	—	—	—	—	—	√	√	—

[a] Factory Installed
[b] Optional - Field Install

Notes

About Trane and American Standard Heating and Air Conditioning

Trane and American Standard create comfortable, energy efficient indoor environments for residential applications. For more information, please visit www.trane.com or www.americanstandardair.com.

The manufacturer has a policy of continuous data improvement and it reserves the right to change design and specifications without notice. We are committed to using environmentally conscious print practices.

AHR-SVX009B-EN 19 Mar 2026
Supersedes AHR-SVX009A-EN (October 2025)

©2026